NEXT ASSY.	USED ON

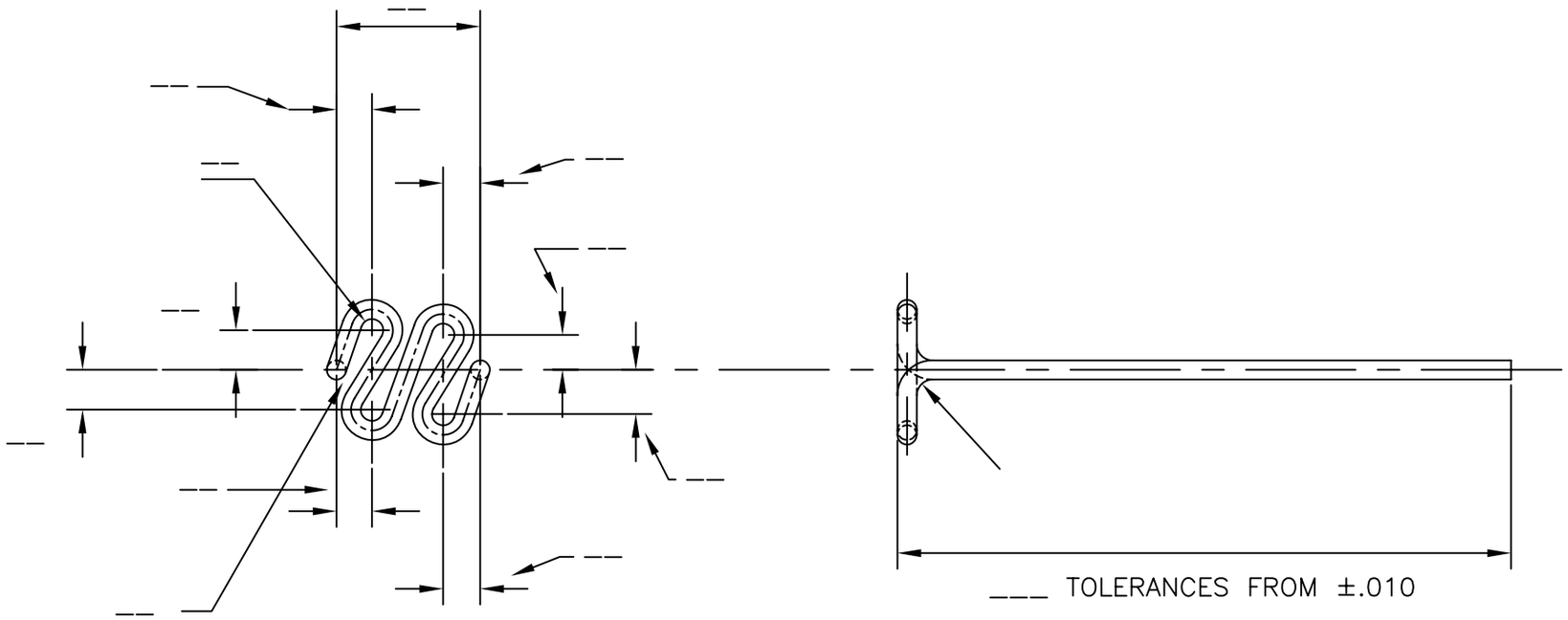

NOTES
1. ALL TOLERANCES FOR THIS FILAMENT ARE FROM ±.010
2. WIRE DIAMETER ____ ±1.5%
3. MATERIAL TYPE ____

REV.	DATE	CHANGE

SCALE	NONE
DR. BY	DATE
CH. BY	DATE
APR. BY	DATE

TITLE
FILAMENT - PLANAR

MAT'L
SEE NOTES

ALL DIMENSIONS IN INCHES UNLESS OTHERWISE NOTED

STANDARD TOLERANCES

FRAC	±1/64	2PL	±.02	ANG	±1/2°
1PL	±.1	3PL	±.005	SUR	63

UNION CITY FILAMENT CORP.
1039A HOYT AVE, RIDGEFIELD, NJ 07657
201-945-3366

SIZE A

DWG #